bürkert
FLUID CONTROL SYSTEMS

Turbidity Sensor Cube

- Fully compatible with büS systems and a wide range of further analysis sensor cubes
- Optical sensor according to DIN EN ISO 7027 or EPA method 180.1
- Modular sensor cube for hot swap (exchange during operation)
- Minimal sample water flow needed
- With moisture monitoring for permanently stable turbidity measurement



Product variants described in the data sheet may differ from the product presentation and description.

Can be combined with

Type 8905
Online Analysis System

Type 8920
Bürkert Communicator

Type description

This sensor cube measures turbidity according to DIN EN ISO 7027 or EPA method 180.1 and is designed for operation on a fluidic backplane in the Online Analysis System 8905.

The continuous analysis of turbidity in water is an indicator of undesirable, undissolved substances in water. The measurement before and after filter stages can indicate the filter effect and enables, for example, the optimisation of backwashing processes. In the best case, this can lead to water and energy savings.

The electrical and fluidic connections are made via the connection panel of the system. The sensor cube communicates with the system via büS, allowing fully automatic login to the online analysis system. If the sensor is plugged into the system, it automatically logs on to the büS and can be parameterised according to customer requirements.

DTS 1000220812 EN Version: O Status: RL (released | freigegeben | validé) printed: 06.08.2021

powered by EDIP büS

© Christian Bürkert GmbH & Co. KG, Subject to alteration

Visit product website

Table of contents

DTS 1000220812 EN Version: O Status: RL (released | freigegeben | validé) printed: 06.08.2021

1. General technical data

Product properties	
Material	
Please make sure the device materials are compatible with the fluid you are using. Detailed information can be found in chapter "2.1. Chemical Resistance Chart – Bürkert resistApp" on page 4.	
Housing	PPE + PS
Lever	Zamak, painted
Seals	EPDM
Cuvette	• In glass for version with sensor according to DIN EN ISO 7027 • In PET and glass for version with sensor according to EPA method 180.1
Valve	Silicone
Dimensions	Detailed information can be found in chapter "3. Dimensions" on page 5.
Turbidity sensor	90° light scattering, replaceable cuvette[1)] Sensor according to: • DIN EN ISO 7027: IR-Laser • EPA method 180.1: Tungsten lamp
Compatibility	With Online Analysis System Type 8905 (the electrical and fluidic contact is made via backplane system.) Detailed information can be found in the data sheet of the online analysis system, see **data sheet Type 8905** ▸ for more information.
Measuring range	• 0…40 FNU[2)] with sensor according to DIN EN ISO 7027 • 0…40 NTU[2)] with sensor according to EPA method 180.1
Maintenance	• 12 months nominal, depending on the water quality. Regular manual or automatic cleaning (with Type MZ20, see **data sheet Type MZ20** ▸ for more information.) • Exchange of desiccant as required, monitoring of humidity by means of integrated sensor

Performance data		
Turbidity measurement with sensor according to	**DIN EN ISO 7027**	**EPA method 180.1**
Measuring range resolution	± 0.0006 FNU	± 0.005 NTU
Measurement deviation	± 0.02 FNU or 2 % of measured value (the greater value applies)	± 0.02 NTU or 2 % of measured value (the greater value applies)
Linearity	± 0.5 % of full scale	
Repeatability	± 0.02 FNU or 2 % of measured value (the greater value applies)	± 0.02 NTU or 2 % of measured value (the greater value applies)
Response time (t90)	Depending on filter settings (by default 8 samples = 1 s)	
Humidity monitoring	Yes	No
Exchangeable desiccant agent	Yes	No

Electrical data	
Operating voltage	24 V DC through the backplane of the system Type 8905 via büS
Power consumption	0.8 VA

Media data	
Fluid	Water without particles: drinking water, industrial water
pH value	pH 4…pH 9
Sample water	
Temperature	+ 3…+ 40 °C (+ 37…+ 104 °F)
Pressure	PN3
Flow rate	> 6 l/h
Sample water filter	> 100 µm

Process/Port connection & communication	
Process connection	Via pinch valve in the fluidic backplane of the Type 8905 Detailed information can be found in the data sheet of the Online Analysis System, see **data sheet Type 8905** ▸ for more information.
Electrical connection	Spring contacts in the fluidic backplane of the Type 8905, which is connected to a büS System Detailed information can be found in the data sheet of the Online Analysis System, see **data sheet Type 8905** ▸ for more information.

DTS 1000220812 EN Version: O Status: RL (released | freigegeben | validé) printed: 06.08.2021

Data transfer	
Internal communication	Through büS (Bürkert bus, CAN–Protocol)
External communication by status LED	According to NAMUR NE 107
Approvals and Certificates	
Standards	
Protection class according to IEC/ EN 60529	IP65, when plugged in the fluidic backplane IP20, as standalone product
Directives	
CE directives	The applied standards, which verify conformity with the EU Directives, can be found on the EU Type Examination Certificate and/or the EU Declaration of conformity (if applicable)
Environment and installation	
Ambient temperature	
Operating	+3…+40 °C (+37…+104 °F)
Storage and transport	For empty/purged sensor cube: -10…+60 °C (+14…+140 °F)
Relative air humidity	≤90 %, without condensation
Height above sea level	Max. 2000 m
Operating condition	Continuous
Equipment mobility	Fixed
Application range	Indoor and outdoor (Protect the device against electromagnetic interference, ultraviolet rays and, when installed outdoors, against the effects of climatic conditions)
Installation category	Category I according to UL/EN 61010-1
Pollution degree	Degree 2 according to UL/EN 61010-1

1.) Only for sensor acc. to DIN EN ISO 7027 and only by Bürkert qualified staff - contact your nearest Bürkert facility

2.) Further measuring ranges on request

2. Materials

2.1. Chemical Resistance Chart – Bürkert resistApp

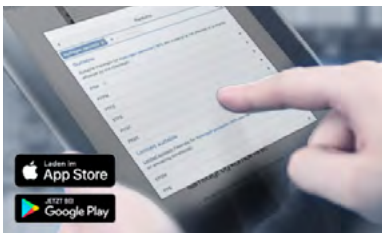

Bürkert resistApp – Chemical Resistance Chart

You want to ensure the reliability and durability of the materials in your individual application case? Verify your combination of media and materials on our website or in our resistApp.

Start Chemical Resistance Check

DTS 1000220812 EN Version: O Status: RL (released | freigegeben | validé) printed: 06.08.2021

3. Dimensions

Note:
Dimensions in mm

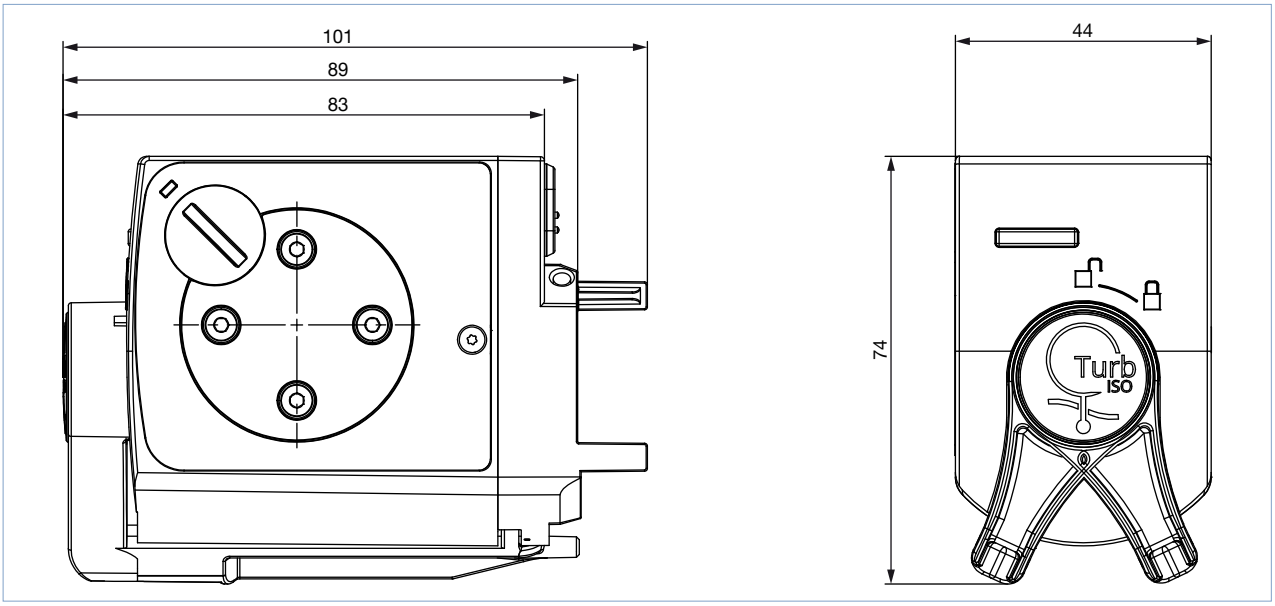

4. Product installation

4.1. Installation notes

Note:

- The sensor cube is designed for use with the online analysis system, Type 8905. The sensor cube is simply plugged into the backplane in Type 8905.
- It is also possible to mount the backplane individually on a DIN rail.

See **data sheet Type 8905** ▸ Online Analysis System for more information.

Installation examples	
Product mounted in a housing for the Online analysis system Type 8905. • Turbidity Sensor Cube Type MS05 • Housing Type 8905 with display Type ME21 and controller Type ME25 	**Product without housing mounted of the backplane on standard rail (TS35).** 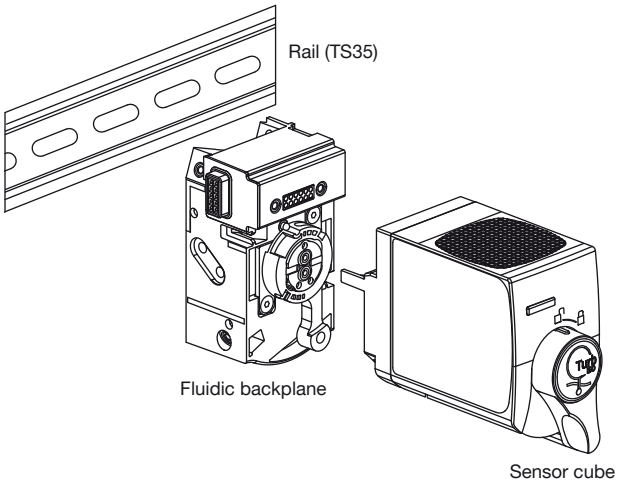

DTS 1000220812 EN Version: O Status: RL (released | freigegeben | validé) printed: 06.08.2021

5. Product operation

5.1. Measuring principle

The sensor cube gets the sample water through the fluidic backplane, in which it is plugged in. The measurement is based on the detection of scattered light in an arrangement of 90° to the incident beam. The sample is flowing through a cuvette in glass or in glass/PET.

6. Product design and assembly

6.1. Product features

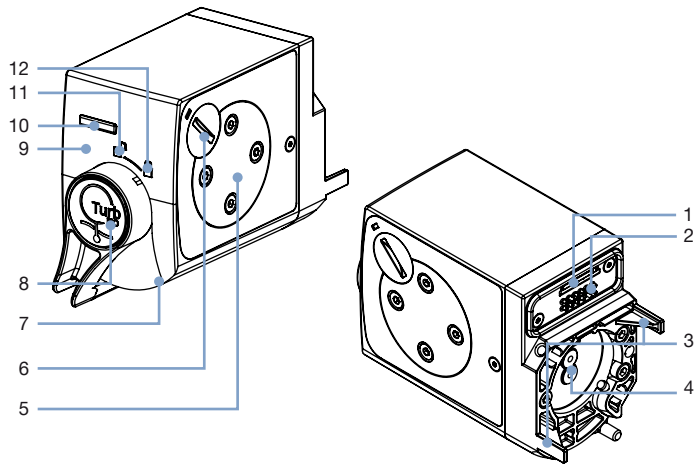

Product without housing

No.	Element
1	Slot micro-SIM card (for configuration data)
2	Electrical interface
3	Guide pins
4	Fluid connections
5	Cover for the cuvette
6	Desiccator cover
7	Lever to: • lock / unlock the product • carry out maintenance operations
8	Push button for unlocking
9	Maintenance position
10	Sensor cube Status LED
11	Unlocked position
12	Locked position

7. Ordering information

7.1. Bürkert eShop – Easy ordering and quick delivery

Bürkert eShop – Easy ordering and fast delivery

You want to find your desired Bürkert product or spare part quickly and order directly? Our online shop is available for you 24/7. Sign up and enjoy all the benefits.

Order online now

7.2. Bürkert product filter

Bürkert product filter – Get quickly to the right product

You want to select products comfortably based on your technical requirements? Use the Bürkert product filter and find suitable articles for your application quickly and easily.

Try out our product filter

DTS 1000220812 EN Version: O Status: RL (released | freigegeben | validé) printed: 06.08.2021

7.3. Ordering chart

Note:
The turbidity sensor cube must be operated within a system.

Please refer to the order information for Online Analysis System Type 8905, see **data sheet Type 8905** ▶ or contact your Bürkert representative.

Description	Article no.
Turbidity sensor cube	
DIN EN ISO 7027	568701
EPA method 180.1	567629

7.4. Ordering chart accessories

Description	Article no.
Type MZ20 Cleaning system, 2 solutions See **data sheet Type MZ20** ▶ Cleaning System for more information.	566393
Bubble trap	568492
Desiccant agent	572279

DTS 1000220812 EN Version: O Status: RL (released | freigegeben | validé) printed: 06.08.2021

Bürkert – Close to You

For up-to-date addresses
please visit us at
www.burkert.com

DTS 1000220812 EN Version: O Status: RL (released | freigegeben | validé) printed: 06.08.2021

Credits, © and concept: Christian Bürkert GmbH & Co. KG | Photographs: Marc Eggimann Fotografie - 4051 Basel | Scanner GmbH - Werbeagentur Künzelsau - 74653 Künzelsau